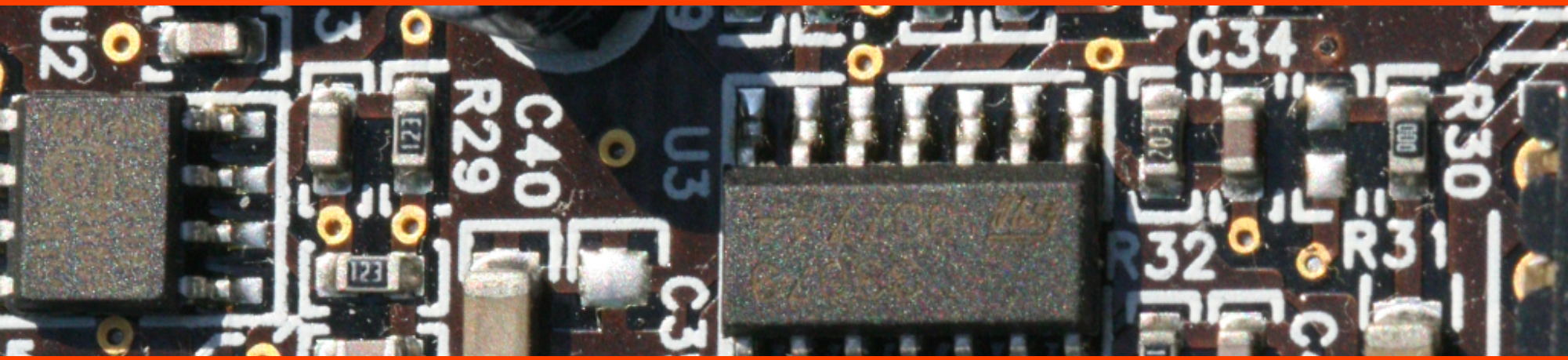


# Experimental implementation of a programmable controlled-phase gate

Vojtěch Trávníček, Karel Lemr,
Antonín Černoch
and Karol Bartkiewicz

Joint laboratory of Optics,
Palacký University Olomouc

Faculty of Physics, Adam Mickiewicz University

Palacký University
Olomouc

# Programmable quantum gates

# Programmable quantum gates

- parameters are **not hard-coded into the setup**
- parameters are set by **program qubits**

# Programmable quantum gates

- parameters are **not hard-coded into the setup**
- parameters are set by **program qubits**

VOLUME 79, NUMBER 2 PHYSICAL REVIEW LETTERS 14 JULY 1997

**Programmable Quantum Gate Arrays**

M. A. Nielsen[1,*] and Isaac L. Chuang[2,†]
[1]*Center for Advanced Studies, Department of Physics and Astronomy, University of New Mexico, Albuquerque, New Mexico 87131-1156*
[2]*Theoretical Astrophysics T-6, Los Alamos National Laboratory, Los Alamos, New Mexico 87545*
(Received 18 March 1997)

# Programmable quantum gates

- parameters are **not hard-coded into the setup**
- parameters are set by **program qubits**

VOLUME 79, NUMBER 2 PHYSICAL REVIEW LETTERS 14 JULY 1997

**Programmable Quantum Gate Arrays**

M. A. Nielsen[1,*] and Isaac L. Chuang[2,†]
[1]*Center for Advanced Studies, Department of Physics and Astronomy, University of New Mexico, Albuquerque, New Mexico 87131-1156*
[2]*Theoretical Astrophysics T-6, Los Alamos National Laboratory, Los Alamos, New Mexico 87545*
(Received 18 March 1997)

VOLUME 88, NUMBER 4 PHYSICAL REVIEW LETTERS 28 JANUARY 2002

**Storing Quantum Dynamics in Quantum States: A Stochastic Programmable Gate**

G. Vidal,[1] L. Masanes,[1,2] and J. I. Cirac[1]
[1]*Institut für Theoretische Physik, Universität Innsbruck, A-6020 Innsbruck, Austria*
[2]*Departament d'Estructura i Constituents de la Matèria, Universitat de Barcelona, E-08028 Barcelona, Spain*
(Received 31 January 2001; published 11 January 2002)

# Why bother?

# Why bother?

deploy a **quantum software** in a general circuit

# Why bother?

deploy a **quantum software** in a general circuit

**teleport entire quantum algorithms**

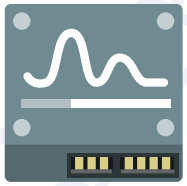

# Why bother?

deploy a **quantum software** in a general circuit

**teleport entire quantum algorithms**

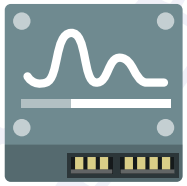

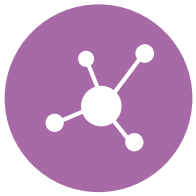

can be used for **genuine quantum machine learning**

# Programmable phase (rotation) gate

# Programmable phase (rotation) gate

- implemented in Olomouc at the Department of Optics
- **rotates a single qubit by angle given by program qubit**

# Programmable phase (rotation) gate

- implemented in Olomouc at the Department of Optics
- **rotates a single qubit by angle given by program qubit**

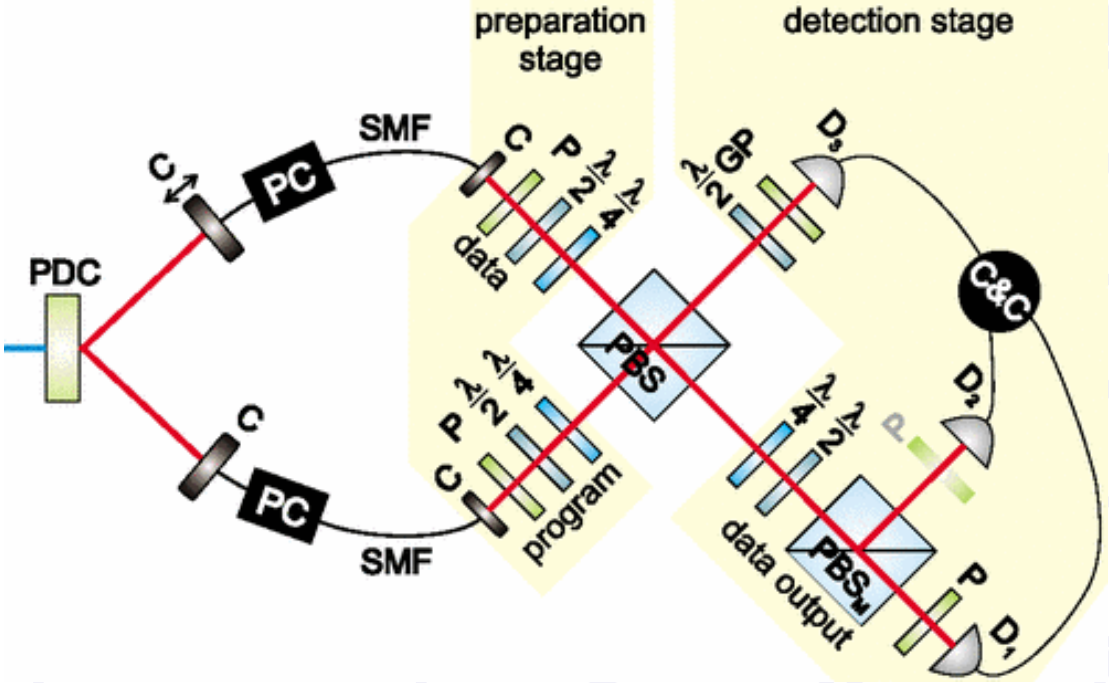


PUB Mičuda *et al.*, Phys. Rev. A **78**, 062311 (2008)

# Programmable phase (rotation) gate

- implemented in Olomouc at the Department of Optics
- **rotates a single qubit by angle given by program qubit**

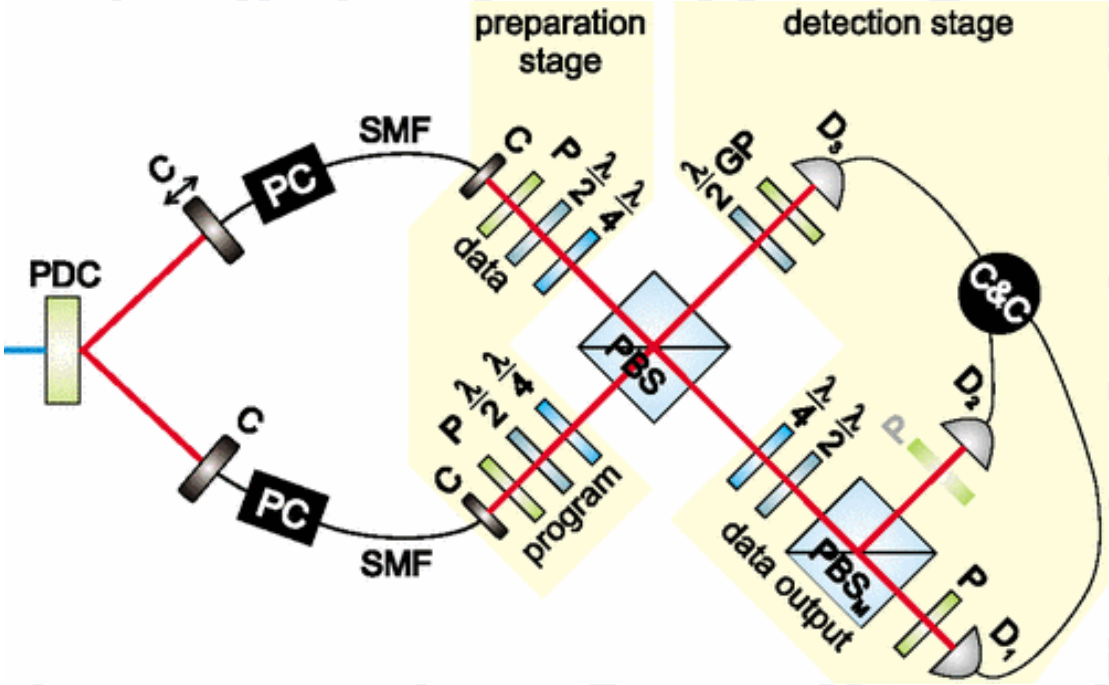


PUB Mičuda *et al.*, Phys. Rev. A **78**, 062311 (2008)

PUB Miková *et al.*, Phys. Rev. A **85**, 012305 (2012)

# Tunable controlled-phase gate

# Tunable controlled-phase gate

- tunable version of the CNOT gate (**universal gate**)

# Tunable controlled-phase gate

- tunable version of the CNOT gate (**universal gate**)
- two qubit gate
- phase shift $\varphi$ is introduced to $|11\rangle$ state

$$|mn\rangle \rightarrow \mathrm{e}^{i\varphi\delta_{m1}\delta_{n1}}|mn\rangle \qquad m, n \in \{0, 1\}$$

# Tunable controlled-phase gate

- tunable version of the CNOT gate (**universal gate**)
- two qubit gate
- phase shift $\varphi$ is introduced to $|11\rangle$ state

$$|mn\rangle \rightarrow e^{i\varphi\delta_{m1}\delta_{n1}}|mn\rangle \qquad m, n \in \{0, 1\}$$

non-optimal:

PUB Lanyon *et al.*, Nat. Phys. **5** 134 (2009)

optimal:

PUB Lemr *et al.*, Phys. Rev. Lett. **106** 013602 (2011)

*Note: non-programmable gates, $\varphi$ hard-coded in the setup*

# Controlled-unitary gate

# Controlled-unitary gate

- can be implemented with **two CNOT gates**

PUB Barenco *et al.*, Phys. Rev. A **52**, 3457 (1995)

# Controlled-unitary gate

- can be implemented with **two CNOT gates**

PUB Barenco *et al.*, Phys. Rev. A **52**, 3457 (1995)

- or **one tunable c-phase gate**
- important for probabilistic platforms

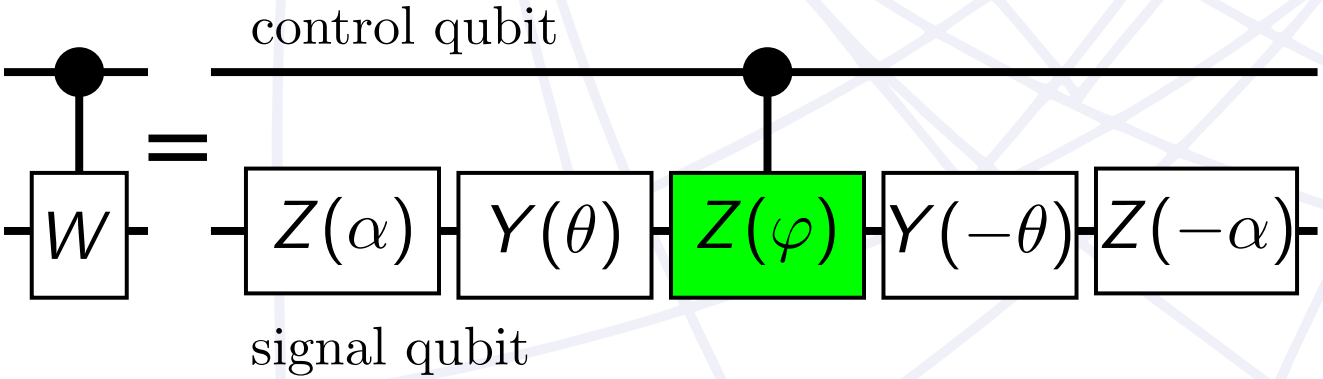


PUB Lemr *et al.*, Phys. Rev. Lett. **114**, 153602 (2015)

# Programmable tunable c-phase gate

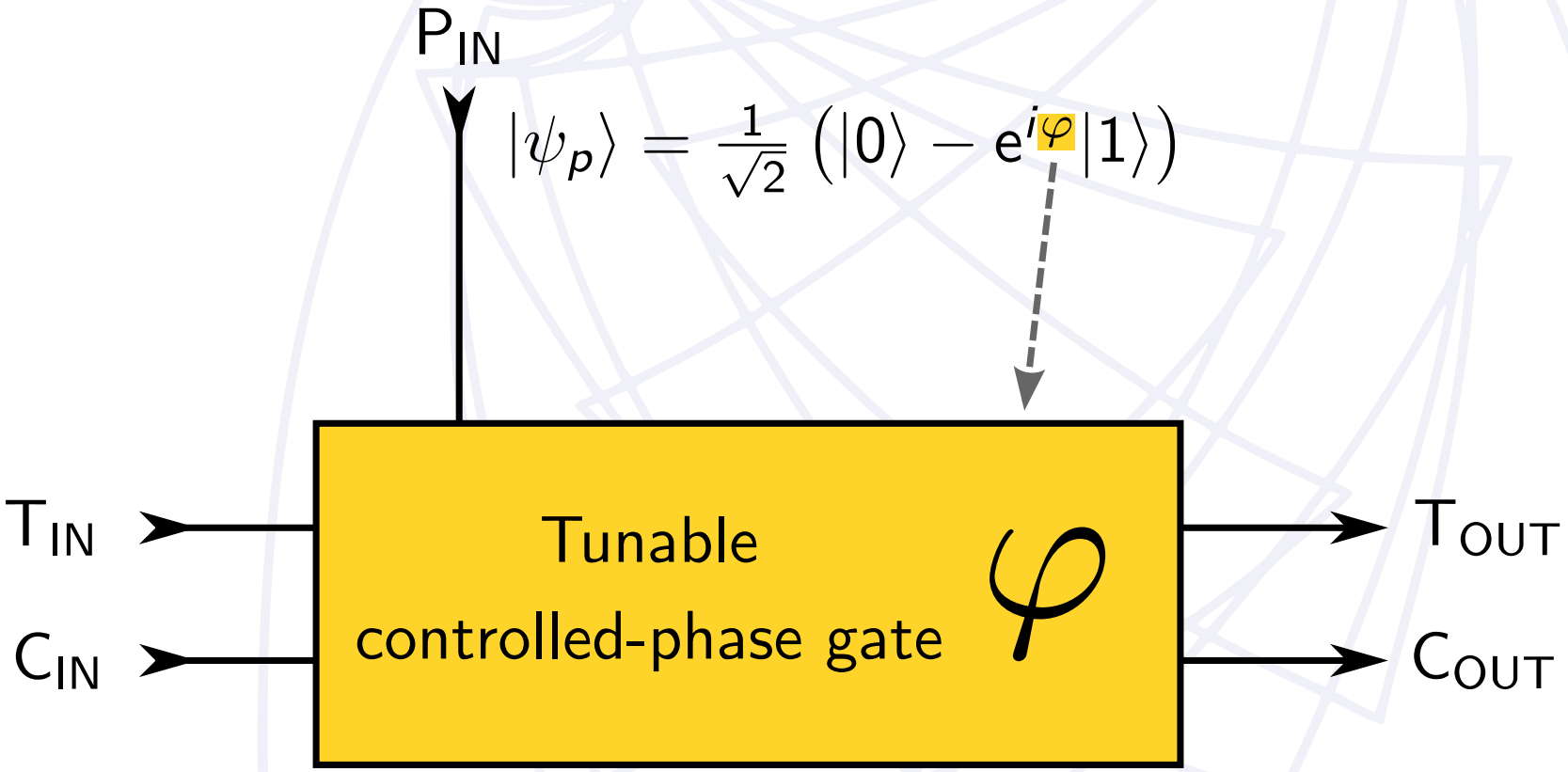


PUB Lemr *et al.*, J. Opt. **17**, 125202 (2015)

# Linear-optical setup

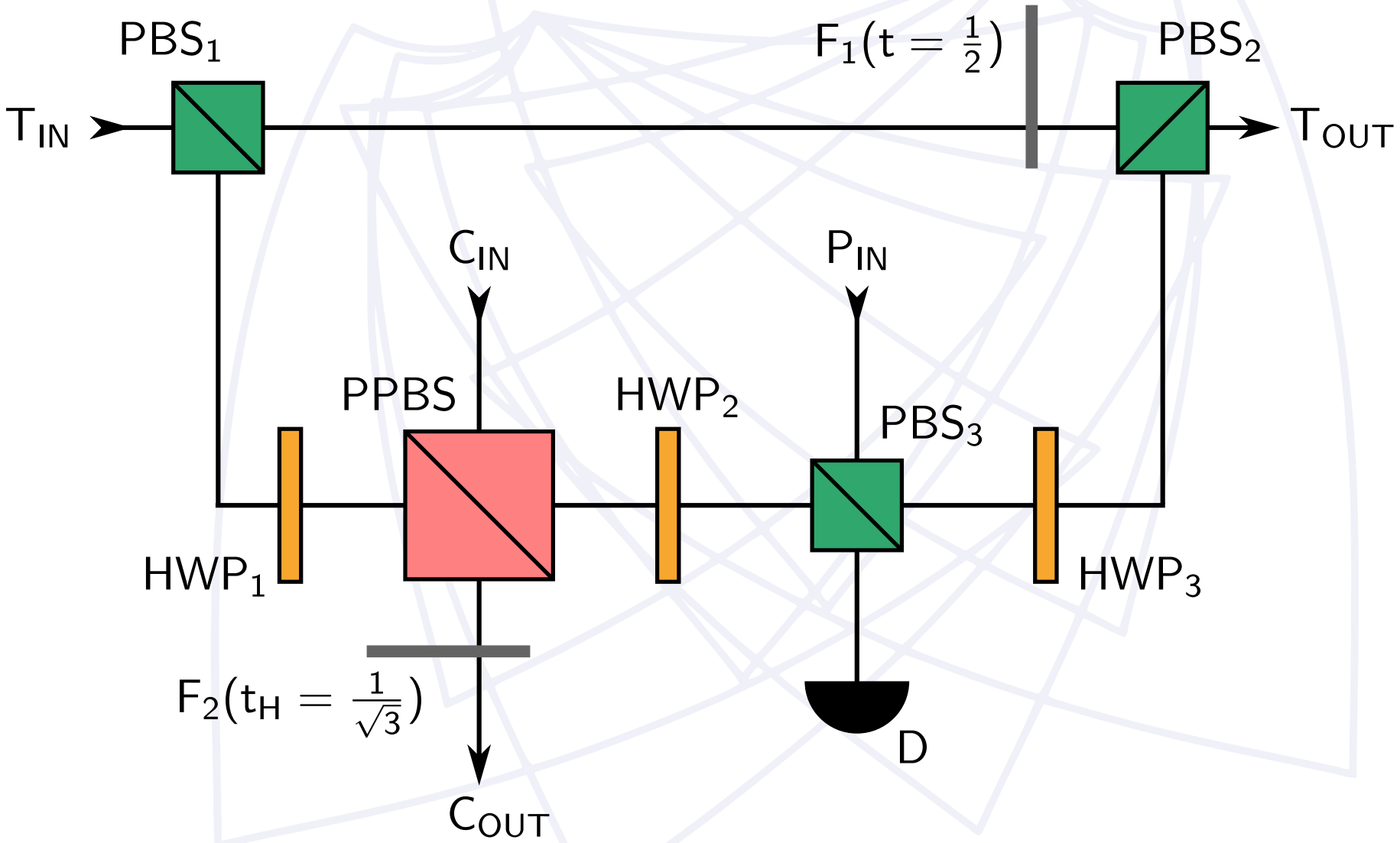


*Note: encoding* $|0\rangle \widehat{=} |H\rangle$, $|1\rangle \widehat{=} |V\rangle$

# Linear-optical setup explained

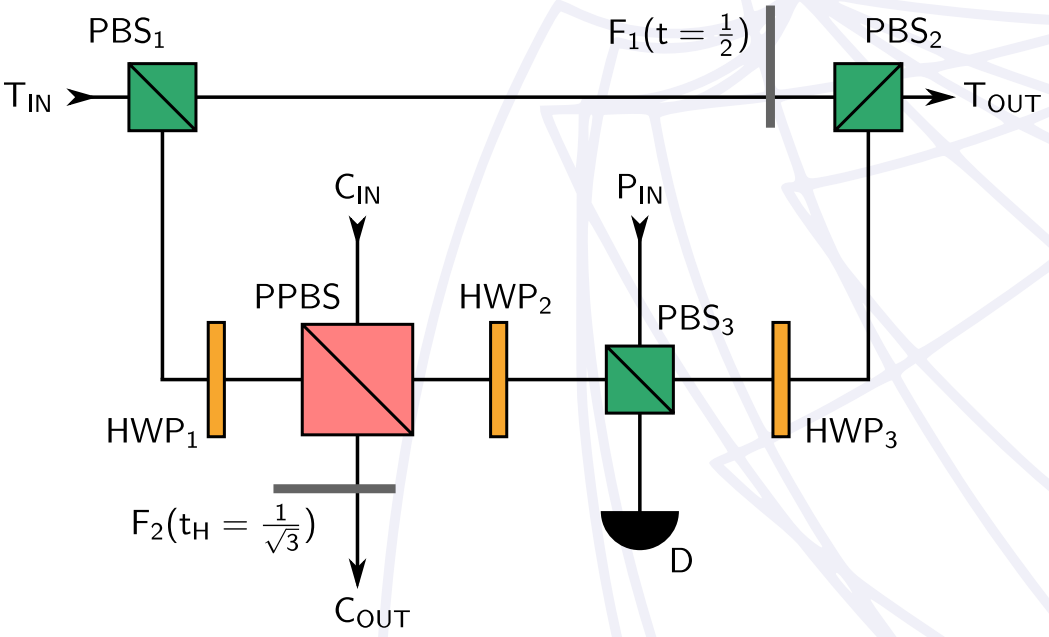

# Linear-optical setup explained

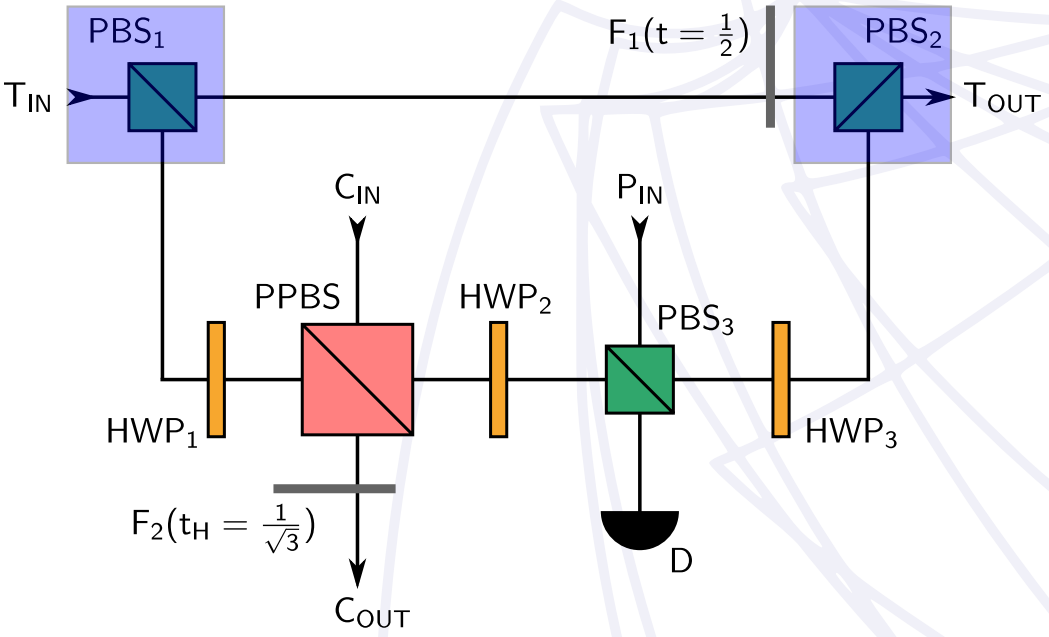


- PBS: encoding conversion polarization $\leftrightarrow$ spatial mode
- the "Lanyon" trick – obtaining ancillary modes
- 2 spatial $\times$ 2 polarization modes for target qubit

# Linear-optical setup explained

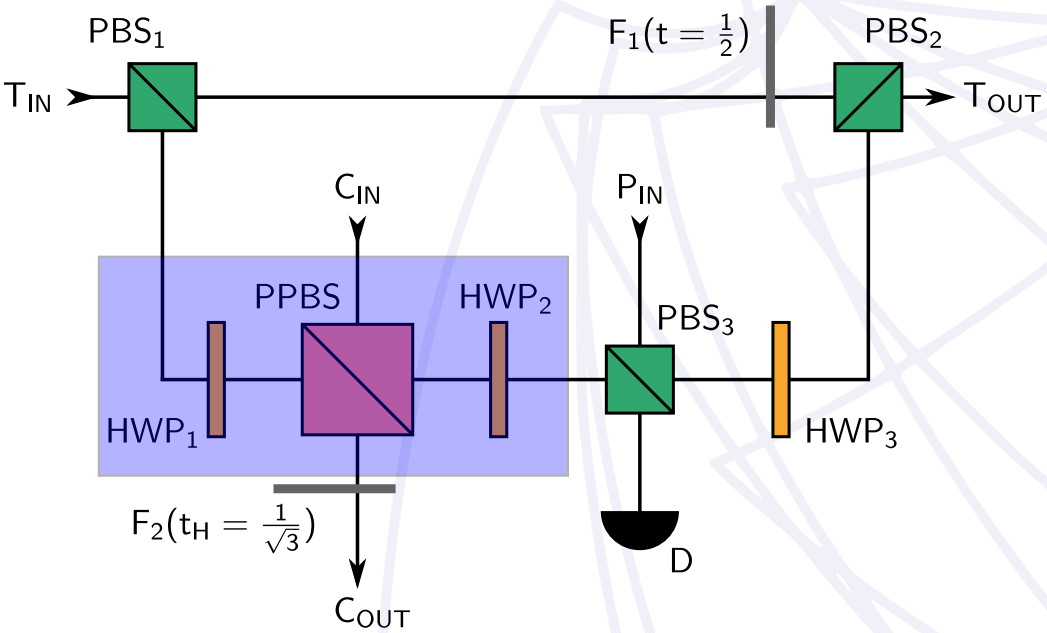


- PBS: encoding conversion polarization $\leftrightarrow$ spatial mode
- the "Lanyon" trick – obtaining ancillary modes
- 2 spatial $\times$ 2 polarization modes for target qubit

- PPBS + HWPs: implement a CNOT gate
- the "Kiesel" method
- if control qubit is $|1\rangle$, then target gets swapped to $|0\rangle$

PUB Kiesel *et al.*, Phys. Rev. Lett. **95**, 210505 (2005)

# Linear-optical setup explained

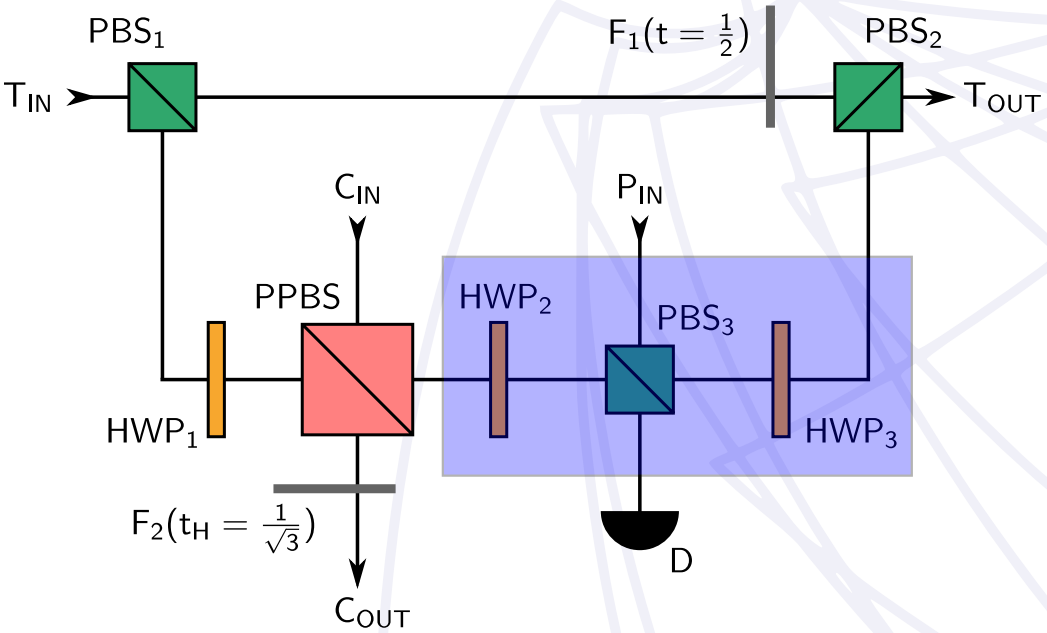


- PBS: encoding conversion polarization $\leftrightarrow$ spatial mode
- the "Lanyon" trick – obtaining ancillary modes
- 2 spatial $\times$ 2 polarization modes for target qubit

- PPBS + HWPs: implement a CNOT gate
- the "Kiesel" method
- if control qubit is $|1\rangle$, then target gets swapped to $|0\rangle$

- PBS + HWPs: implement a programmable phase gate
- the "Mičuda" gate
- phase shift $\varphi$ is added to the target in $|0\rangle$ state

# Work in progress

# Work in progress

- compact interferometer using beam displacers

# Work in progress

- compact interferometer using beam displacers
- three-photon source: SPDC + attenuated fundamental

# Work in progress

- compact interferometer using beam displacers
- three-photon source: SPDC + attenuated fundamental
- ongoing work

# Implementation on IBMQ

# Implementation on IBMQ

- implemented as a Toffoli (control-control-NOT) gate
- standard decomposition into universal set of gates

PUB Barenco *et al.*, Phys. Rev. A **52**, 3457 (1995)

# Implementation on IBMQ

- implemented as a Toffoli (control-control-NOT) gate
- standard decomposition into universal set of gates

PUB Barenco *et al.*, Phys. Rev. A **52**, 3457 (1995)

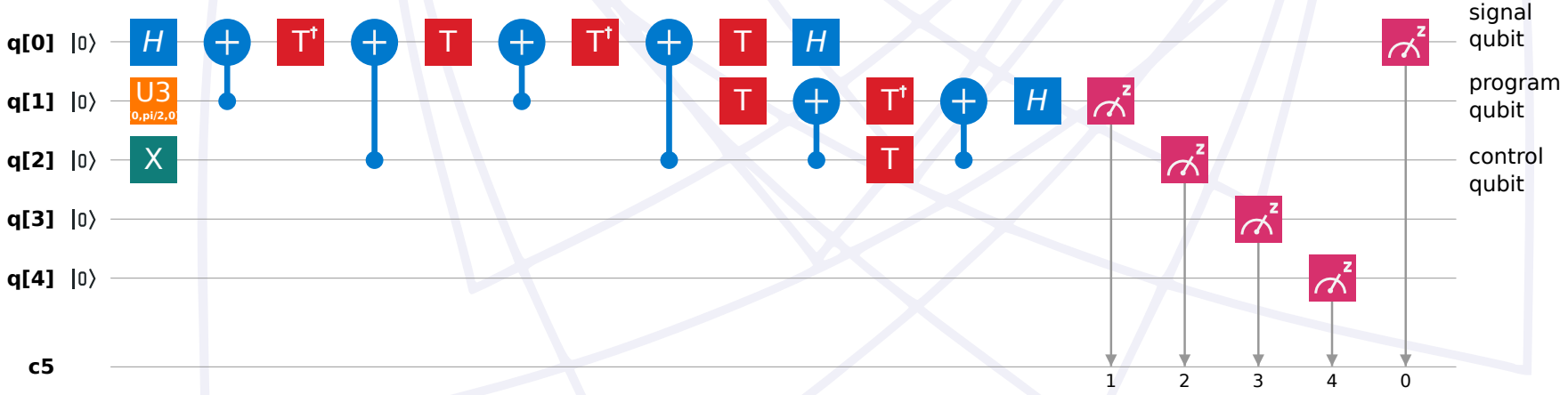

# Results (not great, not terrible)

simulation:

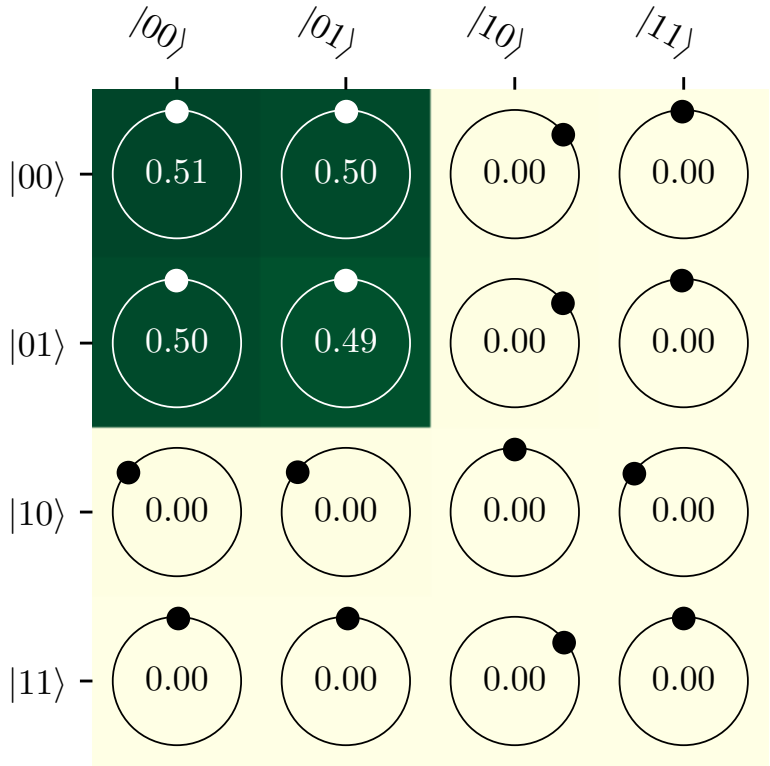


IBMQX4:

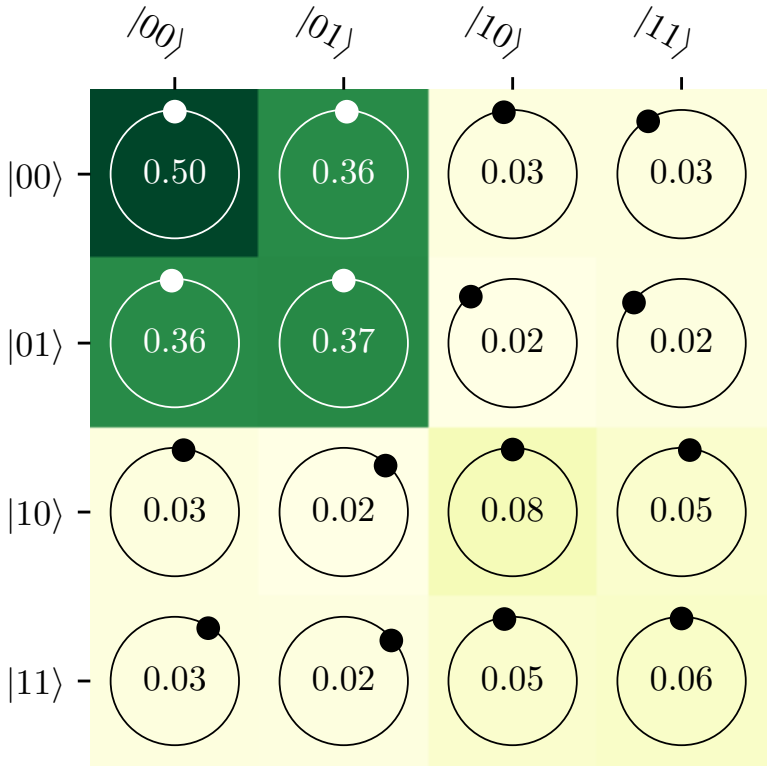


$\varphi = 0$, signal $|+\rangle$, control $|0\rangle$, purity = 66.4 %, fidelity = 79.4 %

# Results (not great, not terrible)

simulation:

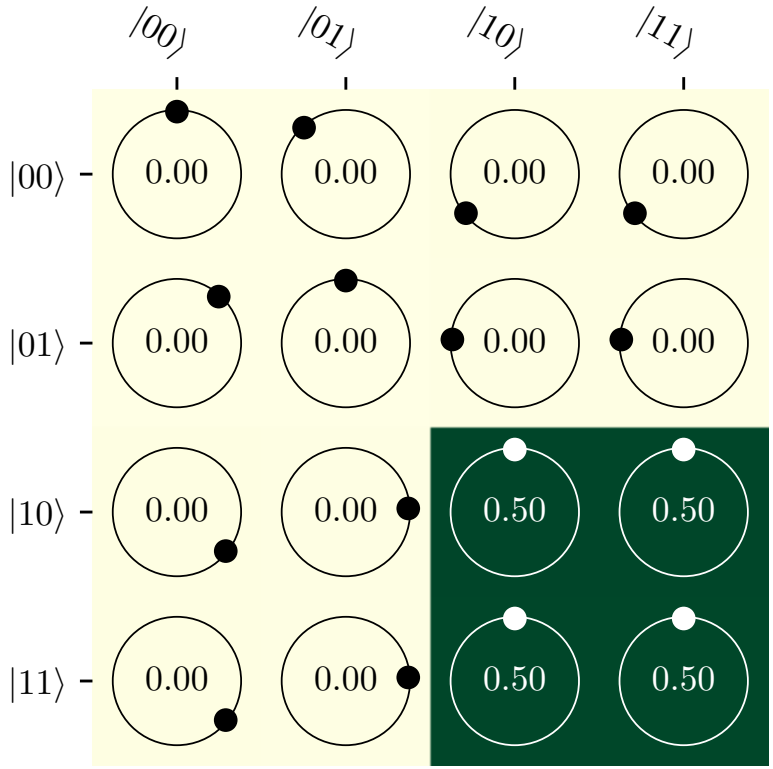


IBMQX4:

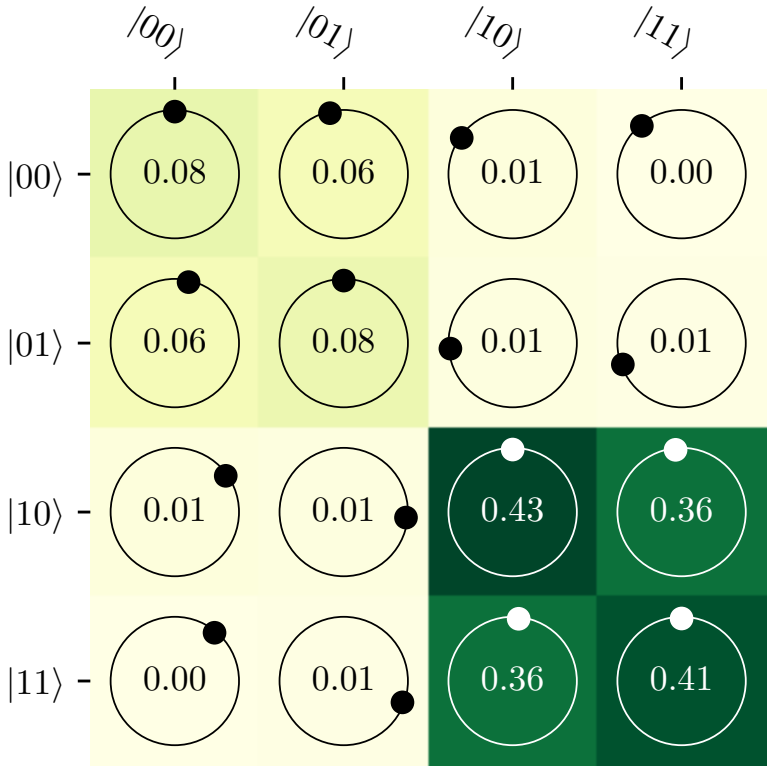


$\varphi = 0$, signal $|+\rangle$, control $|1\rangle$, purity = 62.8 %, fidelity = 77.5 %

# Results (not great, not terrible)

simulation:

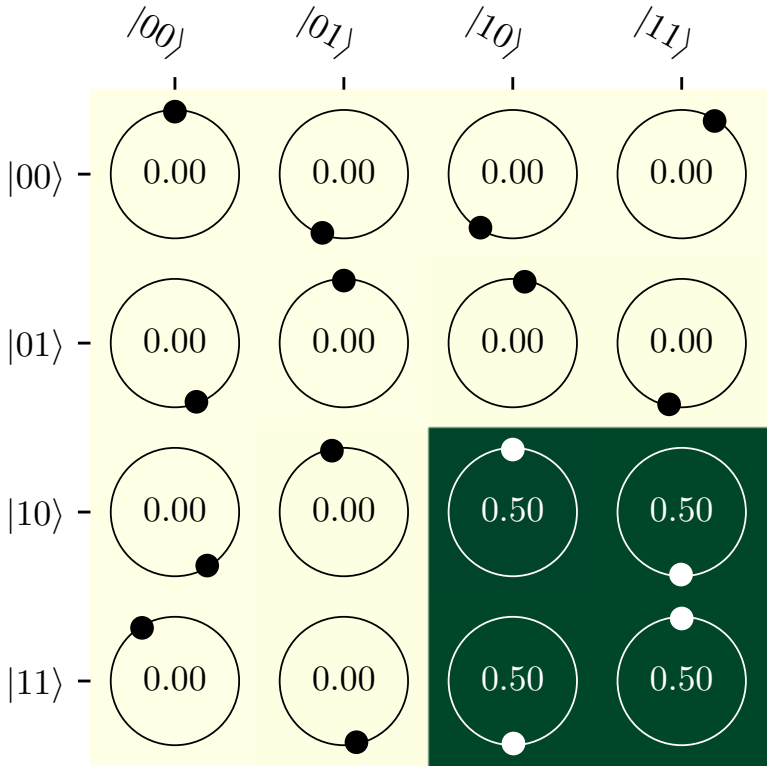


IBMQX4:

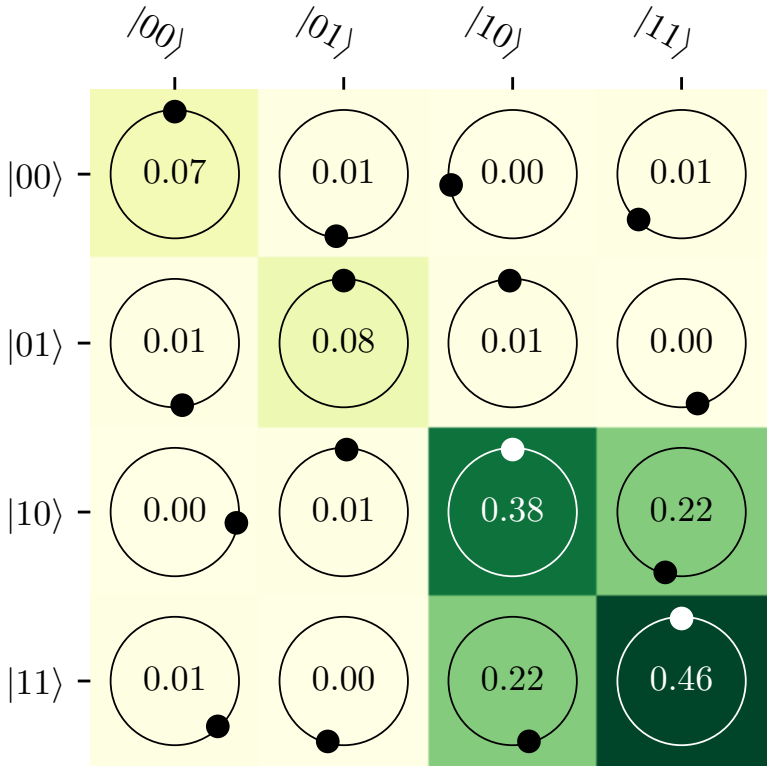


$\varphi = \pi$, signal $|+\rangle$, control $|1\rangle$, purity = 47.3 %, fidelity = 63.7 %

**Thank You for your attention!**